INSTRUCTION PAMPHLET

U-5019

MAINTENANCE
OF
STYLE "S"
a-c. and d-c.
SIGNALS

JUNE, 1944

UNION SWITCH & SIGNAL CO.
SWISSVALE, PA.

2M-6-44-4

UNION SWITCH & SIGNAL CO.

SWISSVALE, PA.

MAINTENANCE OF STYLE "S" A. C.
AND D. C. SIGNALS

SECTION I—D. C. SIGNALS

1. General

All moving parts of the signal must, under all conditions of weather, move with perfect freedom. These parts should not be allowed to get tight through use of unsuitable oil or lack of lubrication.

Precaution should be observed to see that the semaphore spectacle castings rest against the stops provided for that purpose, allowing the slot arms and verticle connections to be free from all downward pressure when in the stop position.

Mechanisms are given a severe running test followed by a final inspection before shipment from the factory. Barring accidents in transit or installation, the signal mechanism should be found ready for satisfactory operation without further adjustment.

Before placing any signal in service, remove all oil, grease and dirt from armature and poles of slot magnet.

2. Lubrication:

Avoid using too much oil. Always remove all surplus.

Union Non-Freezing Lubricating Oil (Spec. 1093), or some other high grade light oil, free from acid, should be used for all lubrication except as otherwise specified.

Before placing signal in service, lubricate the bearings in the signal head at the top of the pole and in the mechanism, and fill the oil wells on the motor.

The semaphore shaft journals should be kept well packed with Union Lubricant, Spec. 2553 (Dixon's Semaphore Lubricant Spec. No. 685). Any tendency of the lubricant to cake or cease to flow in the bearing should be relieved by an occasional application of a small amount of Union Lubricating Oil Spec. 1093. Care should be taken not to use an excess of the lubricant or oil. Lubricant oozing out at the end of journals indicates bearing channels are filled.

Previous to 1925, semaphore bearings were furnished with oil cups; since 1925, three types of pressure lubrication fittings have been furnished in the order in which they were introduced as commercial articles, namely, Pin Type, Push Type and Hydraulic.

A pressure gun is recommended for applying lubricant and oil. A gun may be had for signals previous to 1925 which can be applied to the pipe taps in the bearing provided for the oil cups, necessitating removal of the oil cups, when applying the gun.

Bearings with pressure lubrication fittings are best maintained by using the proper type of grease gun (½ pint capacity) equipped with a check valve. Pressure lubrication fittings can be applied to the old bearings not so equipped, providing properly threaded fitting is furnished. The oil cups on previous signals had $\frac{5}{16}$ in. —32 threads. Oil may also be used in the guns when found necessary to use same as a means of softening the lubricant in the bearings.

The three types of pressure lubrication fittings each having a different shaped nozzle can readily be distinguished. The pin type fitting is equipped with a bayonet type attachment for the grease gun; the push type fitting is equipped with a cylindrical shaped nozzle; and the hydraulic fitting is equipped with a beveled nozzle.

An hydraulic gun can be used only on hydraulic fittings.

A push type gun may also be used on hydraulic fittings.

A pin type gun can be used only on pin type fittings.

Mechanism and motor bearings should be oiled once a month.

Chains and Sprockets should be cleaned periodically with gasoline and coated lightly with any good light grease such as that used for semaphore bearings.

Commutators of Motors equipped with copper leaf brushes should be cleaned and then wiped with a cloth slightly moistened with Spec. 1093 oil once a week. Commutators equipped with composition brushes should be kept free from oil at all times.

Circuit Controller: A drop of oil rubbed over the surface of the segments at frequent intervals will reduce both friction and wear on these parts. By the use of a good non-freezing oil, troubles from frost on contacts may be avoided. If contacting surfaces are kept clean, the oil will be beneficial, but if dirt is allowed to collect so as to form a paste or gum, trouble will develop.

Buffers: Before shipment, the lubrication grooves in the piston are packed with Union Lubricant, Spec. 2553 (Dixon's Semaphore Lubricant No. 685).

Remove piston for cleaning once a year, just before cold weather sets in.

Clean all parts thoroughly with gasoline and allow to dry. Repack the lubrication grooves of piston with Union Lubricant Spec. 2553. Surplus lubricant should be removed from the bottom face of piston before placing the piston in the cylinder and from the top face of piston after it is pushed into the cylinder.

The stuffing box leather washers are treated with Union Lubricant Spec. 2553 to make the leather soft

and pliable. When replacing, a thin coating should be applied to each washer, removing excess lubricant that may adhere to piston rod or lodge in air port in piston rod.

Piston rod may be lubricated sparingly to *prevent rusting only*, with Spec. 1093 oil.

Do not use any lubricating compound for the buffer other than specified and under no condition should oil be used except on piston rod as stated above.

3. Motor Brushes

Brushes of the composition type can be ground with fine sandpaper to an even seat on the commutator if uneven bearing surface is found. Do not use emery for this.

Copper leaf brushes are beveled at the end for contact on the commutator.

All brushes are staggered as much as possible.

All brushes must work freely on studs and bear on commutator with a minimum of 2.0 oz. and a maximum of 4.0 oz. pressure per brush.

4. Driving Mechanism: (See Figs. 1 and 3)

The motor by means of a pinion on its armature shaft, engages gear 1. On the same shaft with gear 1 is pinion 2, which engages with gear 3. Sprocket 9 is pinned to the same shaft as gear 3 and drives chain 10. Chain 10 in turn drives chain 11 through a double sprocket. On chains 10 and 11 are two sets of rollers 12-12′ and 13-13′ which engage with the forked end 5 of the slot arm A. When the slot magnet is energized, the fork 5 is held rigid through a system of levers and toggle, and as the rollers on chain travel upward the slot arm is lifted, which in turn lifts the up-and-down rod 6 and moves the semaphore to the caution or clear position.

When the lower chain has lifted the slot arm to the mid-position a contact on circuit controller "C" at the rear of the mechanism is opened, thus opening the circuit of the motor and allowing the slot arm to rest in this position to indicate "caution." When the motor current is cut off the friction brake is applied to the wheel located at the rear of the motor armature shaft which stops the motor and the gears connected so that roller 12 is held in the upper position. The

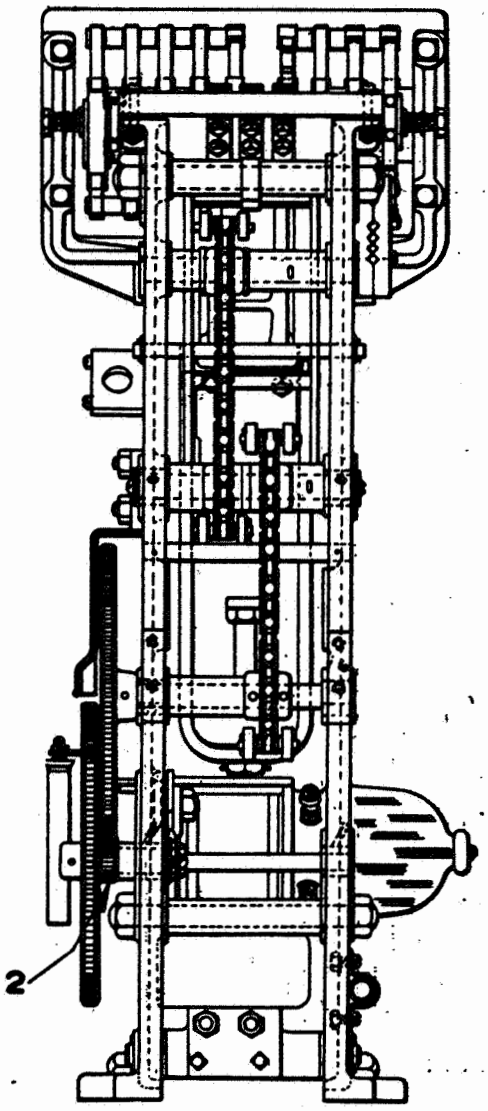

Fig. 1

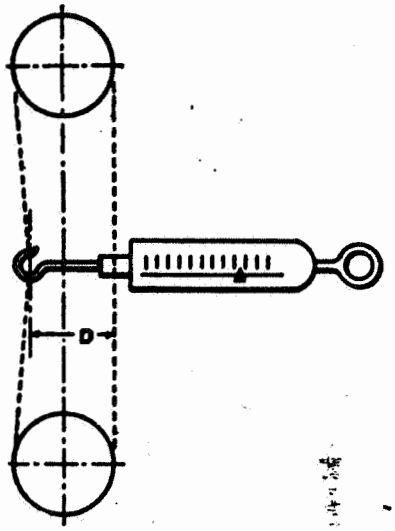

Fig. 2

End View of d. c. one arm 3 position Mechanism

brake should be set so that the over-travel of the rollers after leaving the end of the lifting fork will not be more than one half inch beyond the top of the sprocket, when the motor is operated at 12 volts. Roller 12′ is now in a position to lift the arm should it return to stop from the caution position without proceeding to the clear position. If, however, the

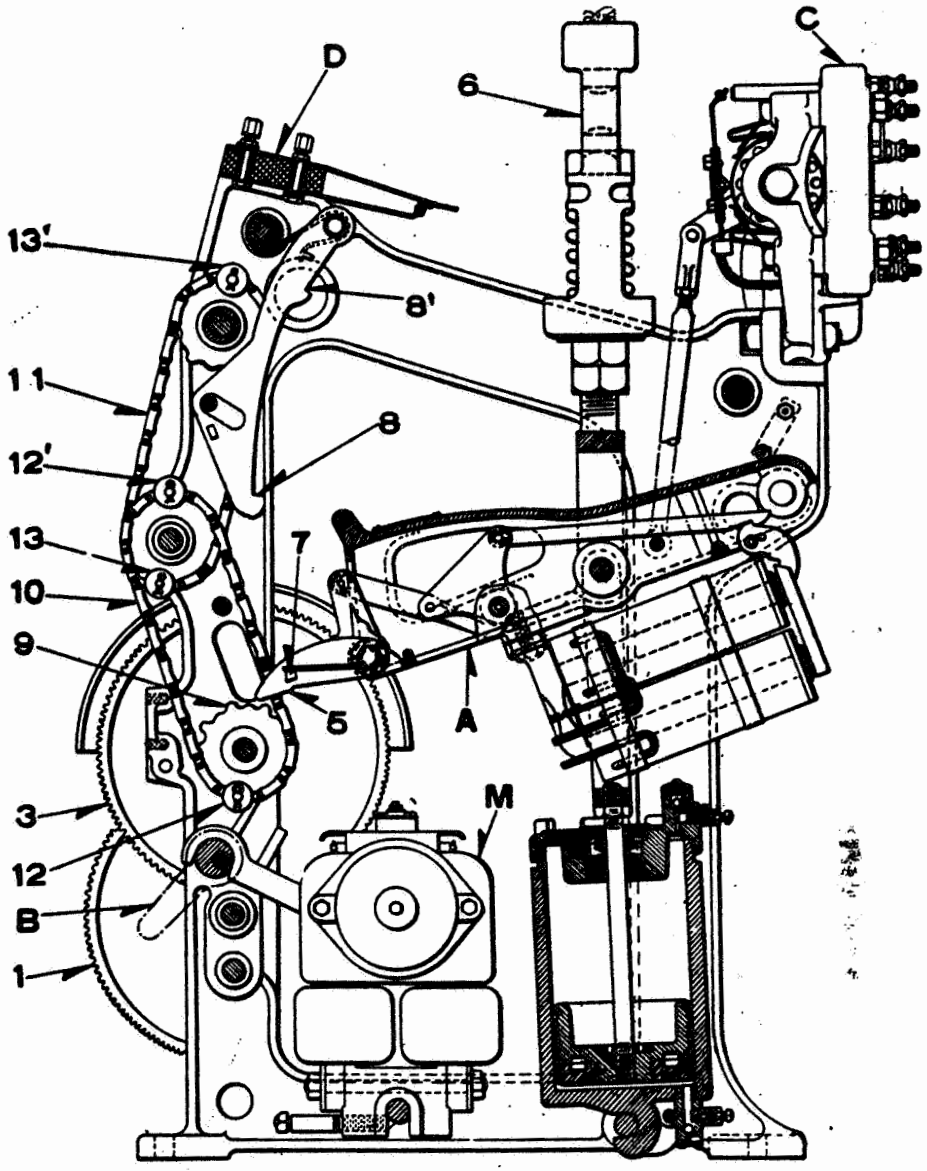

Fig. 3

Side View of d. c. one arm 3 position Mechanism

signal indicates clear before returning to stop, roller 13′ will have accomplished this end by placing the arm in the extreme upper position. After the arm reaches the extreme upper position, a contact on circuit controller "D" is opened to stop the motor. Rollers on the chain in this position are as shown in Fig. 3, as they have completed a full cycle of motion.

When the rollers pass out from under the lifting fork of the slot arm, the slot arm drops down about $\frac{1}{16}''$ to $\frac{1}{8}''$ until the lugs 7 rest on latch hooks 8 or 8′ provided for holding the slot arm in the caution or clear position.

When the mechanism is to operate a two or three arm signal, one motor is used for all arms, with a separate set of lifting chains for each arm.

Lifting chains should not be allowed to become too loose. Adjustment is checked by using a spring balance over the chain at a point midway between upper and lower shaft and with a pull of 5 lbs. as shown in Fig. 2, measuring the distance "D" between center lines. This distance should not be less than $2\frac{1}{8}''$ or more than $2\frac{5}{16}''$.

About $\frac{1}{32}''$ end play may be expected in sprocket bearings.

5. Slot Arm:

The slot arm is that portion of the mechanism controlled directly by the track or line relay. It is shown as A, Fig. 3, and serves to engage the signal semaphore arm with the driving mechanism and holds said arm in the caution or clear position until released, when the signal returns to stop by gravity.

The action of the slot arm and the manner in which its various parts function is shown in Fig. 4.

When in the caution or clear position, both lugs of

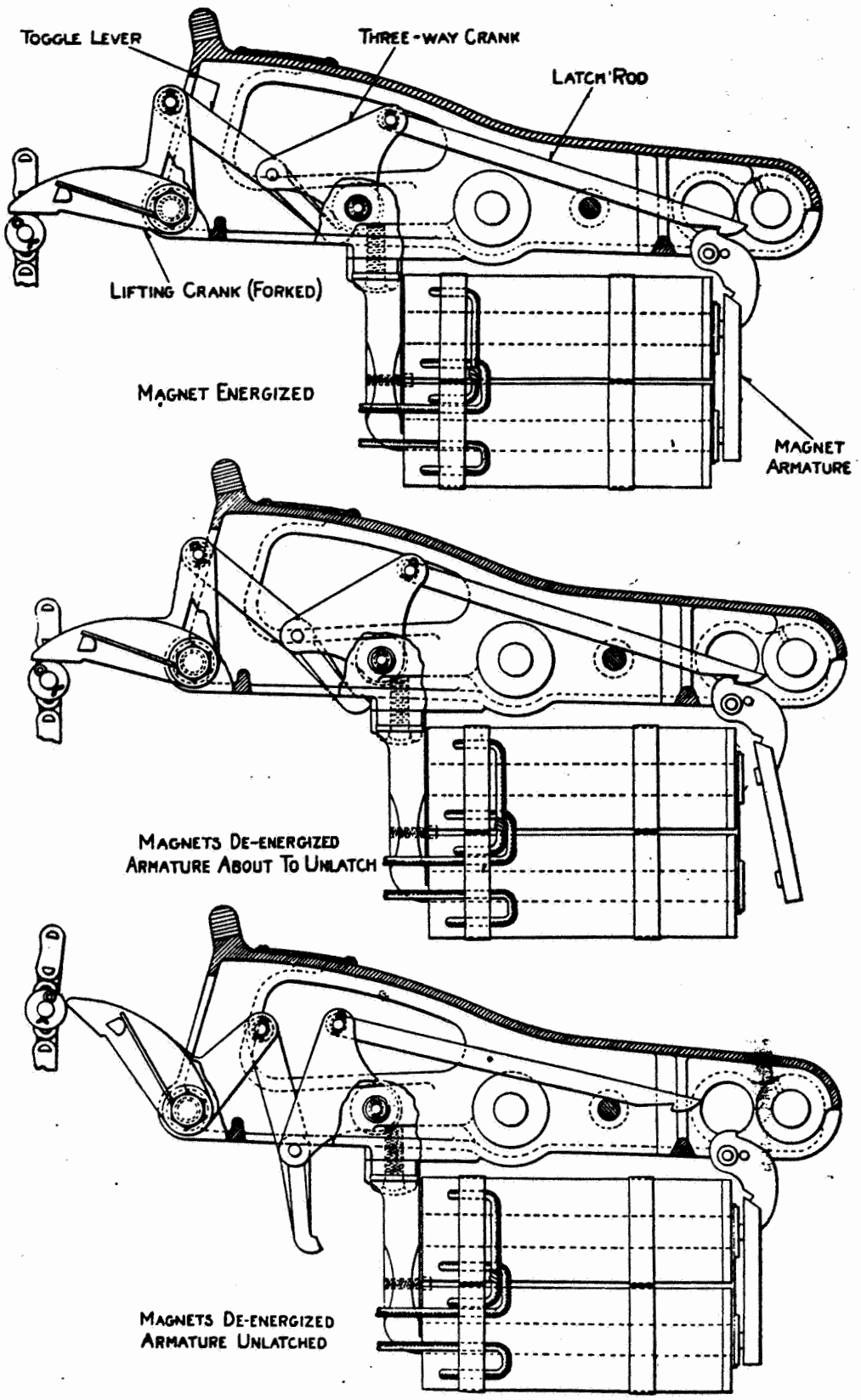

Fig. 4

Central Longitudinal section taken through Slot Arm, showing its mechanism and the successive positions the latter assumes prior to, and at the moment of, releasing the signal mechanism.

the slot fork shall rest evenly on the faces of the supporting pawl, shown as 8 and 8′ in Figure 3, insuring an even distribution of weight on the slot fork.

The hexagonal head bolt that supports the slot fork 5, Figure 3, and coil spring should be adjusted so as to insure that the coils of the spring do not overlap and that the long arm of the spring when disengaged from the fork will have a tension equal to one-quarter turn when applied on the lug of the fork at 7, Figure 3. This tension should be sufficient to restore the fork quickly to its normal position after the slot magnet has released. The bolt should be secured against turning after adjustment by tightening the lock nut on the threaded end of the bolt.

The springs on the supporting pawls should have ample strength to force the pawl sharply against the lugs on the slot fork.

The operation of the signal is very sensitive to the adjustment of the toggle, latch rod, armature, and magnet. In order to more clearly understand proper adjustment, Figs. 7 to 16 inclusive are shown. These views show correct and incorrect conditions and are self-explanatory.

Always keep armature and pole faces clean and free from oil or grease.

6. Toggle:

The length of the slot arm toggle is the distance T in Fig. 15. This is always adjusted at the factory and an identifying numeral stamped on link E, Fig. 15, such as 1, 3, or 5, meaning ¼ in., ⅜ in., or $\frac{5}{32}$ in. toggle respectively. For many years the Style "S" signal slot arms have been adjusted with $\frac{5}{32}$ in. toggle. However, careful check of the identifying numeral should be made before making replacement of link E for any reason, and only toggle links having the same numeral stamped on them as was on the link originally furnished with the slot arm should be used. These parts should never be altered by filing the arm E or the

brass stop B, as changes in the toggle produced thereby seriously affect the safety of the signal.

The end play between the toggle lever and the forked lifting crank should be maintained between $\frac{1}{16}''$ max. and $\frac{1}{32}''$ min., equally divided on each side of the toggle lever. Excessive end play may be corrected by placing washers of suitable thickness on both sides of the toggle lever, or by bending the arms of the lifting crank. If the latter method is employed, the pin holes may have to be rereamed.

7. Armature Trunnions:

The armature should move freely on its trunnion and should have an end play, when the parts are new, of not less than 0.057 in. or more than 0.080 in.

The diameters of the armature fulcrum pin, of the hole in the armature bushing, and the holes in the supporting trunnions in the arm are such as to provide a very close fit between these parts. Excessive wear of these parts will distort the magnetic air gap and permit the upper stop pins to bear on the pole face when they should be free at all times.

When excessive wear is present, the release value of the slot arm will be erratic and renewals should be made of the worn parts.

With the end play taken up in one direction against one of the trunnions, the swing at the lower end of the armature from the vertical position, in one direction only and this direction toward the trunnion against which the armature is bearing, should not be more than $\frac{3}{64}$ inch when the trunnions, trunnion pin, and bushing in the armature are new. For field checks the limiting factor is that the stop pins must not project beyond the edge of the pole face in either extreme position with end play and side play both taken up in the same direction. In addition, the swing or side play in either direction should not be permitted to exceed $\frac{1}{8}$ inch.

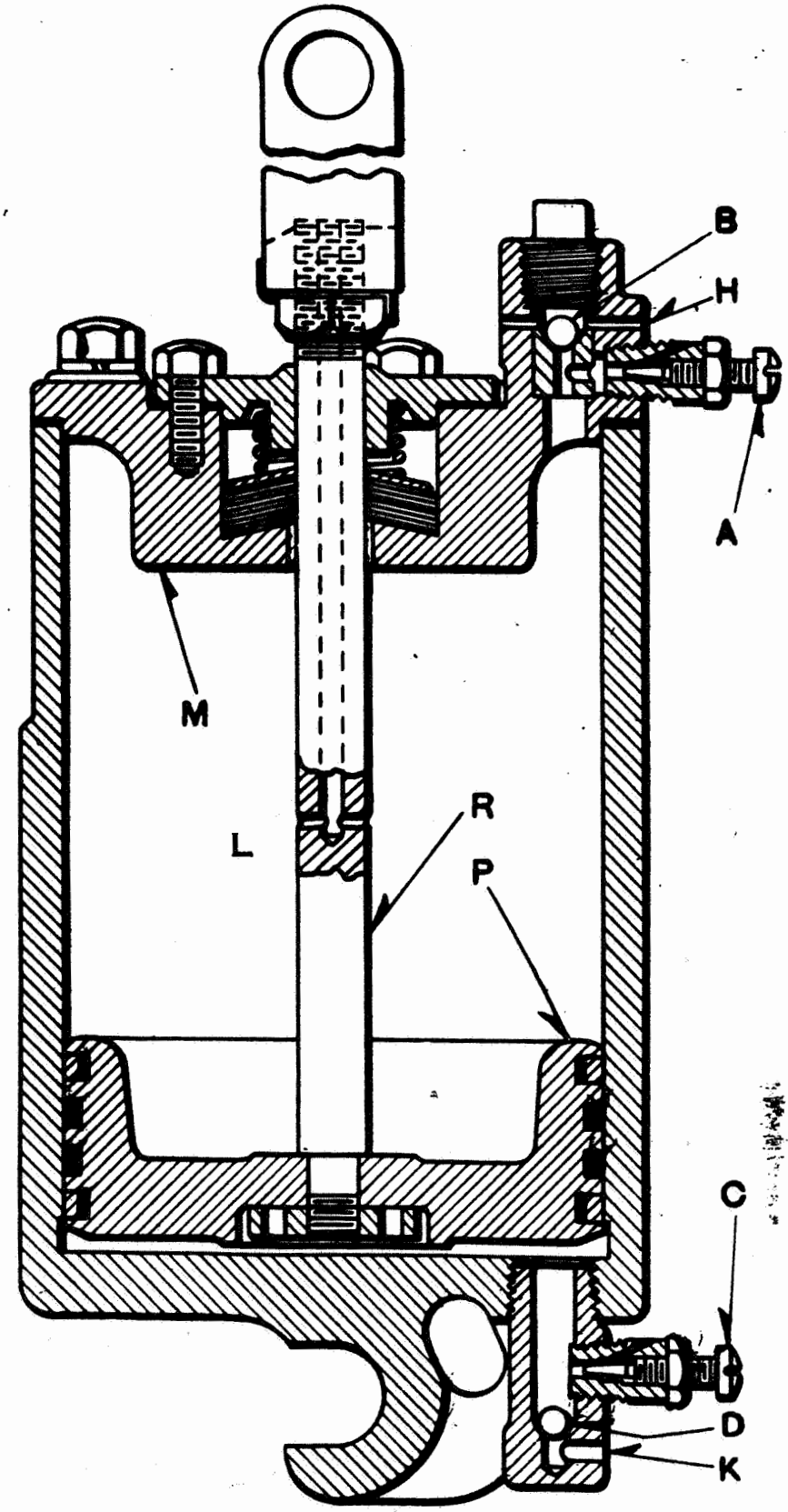

Fig. 5
Sectional view of buffer used on both a.c. and d.c. mechanisms.

8. Motor Gear:

The *Motor pinion* should mesh with the gear of the driving mechanism so that a *slight* back-lash is present in all positions of the gears. An adjusting lever is provided on the mechanism frame at the left of the motor to control this back-lash. By loosening the bolt and moving the lever B Fig. 3 the back-lash is altered. The bolt should be securely tightened after adjustment has been obtained.

9. Adjustment of Motor Brake:

To adjust the brake the signal should be connected to a load similar to that which it will meet in service. The standard semaphore is arranged to give a thrust on slot arm of 160 lbs. at 45° and 170 lbs. at the 90° position. These weights include a 31 pound up and down rod. The brake should be adjusted so that the rollers will not travel more than ½ inch beyond the top of the sprocket when the signal is operated at 12 volts.

10. Spring Buffer:

The proper tension of the spring buffer shown connected to up and down rod in Fig. 3 and Fig. 20 is obtained by adjusting the two nuts under the spring socket until the spring is just strong enough to carry the load without any appreciable loss of stroke.

11. Buffers: (Fig. 5)

It is desirable that the piston be as near the top of the cylinder as practicable when in the clear position in order to obtain the maximum buffing action at the 45° position. To adjust for this, move the slot arm ⅛ to $\frac{3}{16}$ of an inch above the clear latching point and screw up the piston until it strikes the cylinder head. Then securely lock it in this position. In making this adjustment care should be exercised not to scar the piston rod.

Under ordinary conditions, with standard load both needle valves should be open from 3 to 4 turns of the valve screw. When adjusting these valves, proceed as follows: Close the upper valve completely and adjust the lower valve screw until the proper buffing is obtained from 45° to 0°, then lock it in that position. Then adjust the upper valve screw until the proper buffing is obtained from 90° to 45° then lock it in that position. The cylinder head and stuffing box cap must be kept tight.

When proper buffing at the 45° position cannot be obtained by carefully following the above instructions it may be necessary to renew the leather packing washers in the stuffing box, which should ordinarily last about a year. These washers are treated with Union Lubricant Spec. 2553 to make the leather soft and pliable and a thin coat of the lubricant should be applied to each washer when renewing the packing. When replacing the washers, great care should be exercised to see that the total thickness does not exceed $\frac{5}{16}$ of an inch, and thus avoid the introduction of too much friction on the piston rod. The piston rod may be lubricated sparingly to prevent rusting, with any light neutral non-freezing oil, such as our No. 1093 oil. We caution against the use of any lubricating compound other than the one specified, and under no condition should oil be used except as specified above.

12. Pole Changer and Circuit Breaker:

Contact fingers shall be adjusted so that they bear firmly and evenly on their respective segments and springs; all silver contact plates or fingers shall be firmly riveted and soldered in place. All screws and terminal posts must be tight, particular care being devoted to tightening nuts and screws holding contact springs. These springs must be held firmly in place so that they cannot be turned or shifted. Contacts shall be adjusted in accordance with the wiring diagram; it is well in adjusting these springs

to secure at least $\frac{1}{8}''$ opening between contacts End play of circuit controller shaft should not be less than $\frac{1}{64}''$ or more than $\frac{1}{32}''$.

The non-snap pole changer springs shall be so adjusted that when the slot arm is in the stop position the contacts that should be open, that is the upper ones, shall have not less than $\frac{1}{8}''$ opening. When the slot arm is resting on the 45° stop the opening between contact segment and the nearest contact point on the engaging face of the spring shall be not less than $\frac{1}{16}''$. Each pair of contacts shall be adjusted to make and break at the same time.

13. Contacts Mounted Above Sprocket Shaft:

The normally open springs shall have a contact opening of from $\frac{3}{32}''$ to $\frac{1}{8}''$ and shall just close with the bottom of the slot fork lug 7 (Fig. 3) $\frac{1}{2}''$ below face 8′ of the supporting pawl.

The normally closed springs on this controller shall have not less than $\frac{1}{16}''$ contact opening when the fork is resting on the latch; all contacts must be carefully inspected to see that contact points and plates are both firmly riveted and soldered to their springs. All springs must be firmly held in place, the bottom nuts on terminal posts being screwed down tightly so that the contact springs cannot be shifted.

14. Slot Magnets:

The magnet on the slot arm is usually wound to 500 ohms resistance and is slow acting so as to retain sufficient energization to keep the armature attracted during a change of polarity on polarized relays. When the signal is installed in non-polarized territory the slot arm may be equipped with 500 ohm or 1000 ohm non-slow-acting magnets. These magnets may be provided either with or without motor winding.

When used at interlockings or for neutral line control, a slot contact is sometimes provided. This contact is actuated by a separate armature on slot magnet so that the magnet must be energized to close

the contact which supplies current to the motor.

15. Circuits:

Fig. 17 illustrates a typical circuit for the control of a one arm three position automatic signal.

Fig. 18 illustrates a typical circuit for interlocking or line control where the slot magnet functions as a relay and operates a contact for the motor battery.

16. Electrical Inspection:

TEST:

Measure release voltage (shunt) periodically. Tabulate results in a form permitting of ready comparison. A gradual change in release voltage from one period to another indicates a changing condition of the signal. Use a standard voltage for all tests.

INTERVALS:

Electrical tests should be made every six months where signals operate under average conditions. Signals located in dense traffic zones should be given a test every four months.

APPARATUS:

(1) Tests should be made with an E. M. F. of 12 volts at the terminals of the coils. Connect a sufficient number of cells (dry cells may be used) in series with the signal battery to give approximately 14 volts on open circuit.

(2) Voltmeter with a scale reading 0-15 volts.

(3) Adjustable slide resistance for potentiometer connection.

METHOD:

(1) Comparative results can be obtained only by following exactly the same procedure in all tests.

(2) Remove the slot coil leads from the terminals and connect to the testing circuit per diagram. Fig. 6.

(3) First drive the signal to the position at which release (shunt) is to be taken and then open circuit. This is to be done at least twice before taking

readings so as to produce normal conditions.

(4) Adjust to 12 volts with switch "S" open, then close the switch, clear the signal and correct voltage adjustment if necessary. Do not exceed 12 volts on slot coils after closing switch "S." If exceeded, release slot and repeat operation before recording the release value. An overcharge will lower release.

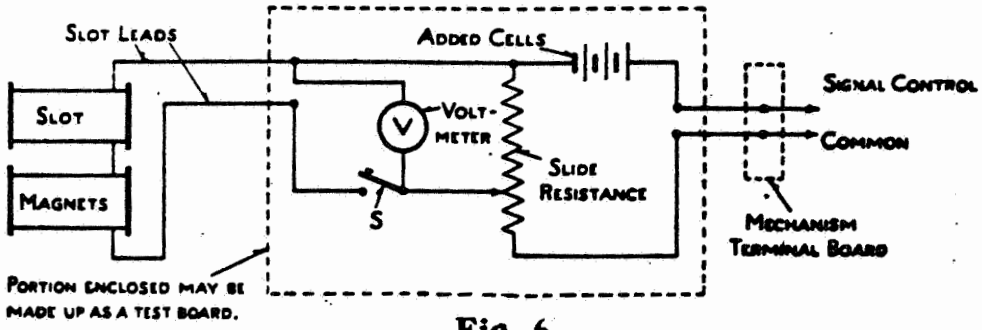

Fig. 6

(5) Before taking release, be sure that the rollers have passed from under the lifting crank.
The release voltage (shunt) should be measured at the 45° position, which gives minimum release, as follows:
Clear signal to the 90° position and after a few seconds release it and allow it to fall to the 45° position. Then measure the release voltage by slowly moving the slide connection on the resistance unit until the slot magnet releases.
At least two readings of release voltage (shunt) should be made as directed above to check against irregularities that may appear in single readings. The data plate value will not always agree with the values obtained in the field due to slight mechanical and frictional variations in individual signals making it necessary to observe several points as noted below. (See section, "Points to be Observed."

Points to be Observed·

(1) The release voltages should be within values

given below:

	SLOW ACTING 500-Ohm, 5/32" Toggle		ORDINARY ACTING 1000-Ohm, 5/32" Toggle		
			Air Gap		
	Air Gap	Rel. Volts	Forged Core Hex. pole	Old Type Rd. poles	Rel Volts
Shop Test.....	.015"	1.8	.020"	.017"	4.00
Min. Shop Value	.....	1.5	.....	.....	3.25
Min. Service....	.011"	1.0	.015"	.013"	2 00

This data is for signal equipment producing thrust on slot arm as previously outlined in Section 9.

(2) If the release voltage is less than the Minimum Shop Values specified in the tables above, the signal should be watched closely and adjustments made before the Minimum Service Value is reached.

(3) All slow acting slots of round pole face type should hold without tripping when the circuit is open 0.6 second with energy at 8.0 volts. This is with the slot arm in the horizontal position. Under the same conditions, the slow acting slots having magnets with hexagon pole faces should hold 0.9 second.

(4) Signals releasing below minimum shop values indicate either one or more of the following conditions:

(a) Excessive friction exists in moving parts such as the toggle, up-and-down rod, slot arm bearing, buffer, semaphore bearings or head gear bearings.

(b) Insufficient torque due to improper semaphore equipment.

(c) That the magnetic air gap has been decreased through wear of the stop pins in the armature. Stop pins should not be allowed to wear beyond a point giving 0.004" less air gap than marked on the data plate of slot arm.

The air gap can be measured by a leaf or a stop pin gauge with the magnet de-energized, armature held by hand. When stop pins need to be renewed, the slot arm should be sent to the shop for repairs and re-adjustment of air gap.

(5) If signals release at values higher than those specified in the tables above, the safety factor is increased by that amount but if they do not operate properly at the higher release values, this would indicate either one or more of the following:

(a) Excessive torque produced by improper semaphore equipment.

(b) Latch hook not seated to full depth in armature notch.

(c) Latch rod too long, allowing toggle to droop when latched.

(d) Latch hook or armature notch worn and not permitting of proper engagement.

(e) Toggle links and connection worn sufficiently to increase the toggle.

(f) Stop pins longer than specified on data plate.

(g) Upper stop pins in armature engaging with pole face.

With lower pins engaging pole face, there should be about .003″ clearance between upper pins and pole face. This means that the upper pins should always be .003″ shorter than the lower pins and the air gap adjusted to be parallel and the same across both pole faces.

Air gap should be as noted in preceding table. The length of the core pins in the armature and the adjustment of the internal levers and links of the arm must never be changed except under the direction of some responsible person.

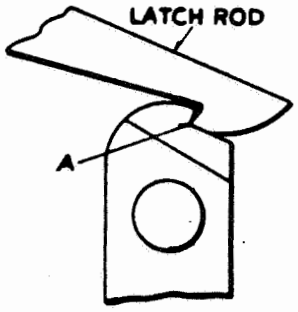

FIG. 7
CORRECT adjustment of lever latch. Point of contact at "A" (bottom of notch).

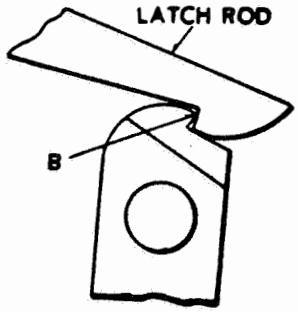

FIG. 8
INCORRECT adjustment of lever latch. Point of contact at "B" (top of notch) increasing pull on armature.

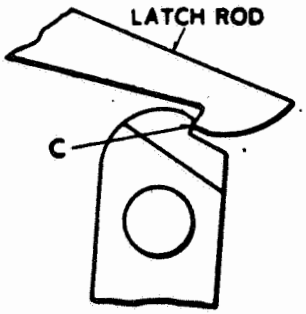

FIG. 9

Lever latch NOT PROPERLY seated to full depth in armature notch. Point of contact at "C" increases leverage pulling armature away from pole pieces.

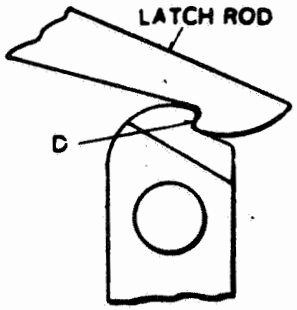

FIG. 10

Wear of point of lever latch raises the point of contact, increasing leverage pulling armature away from pole pieces.

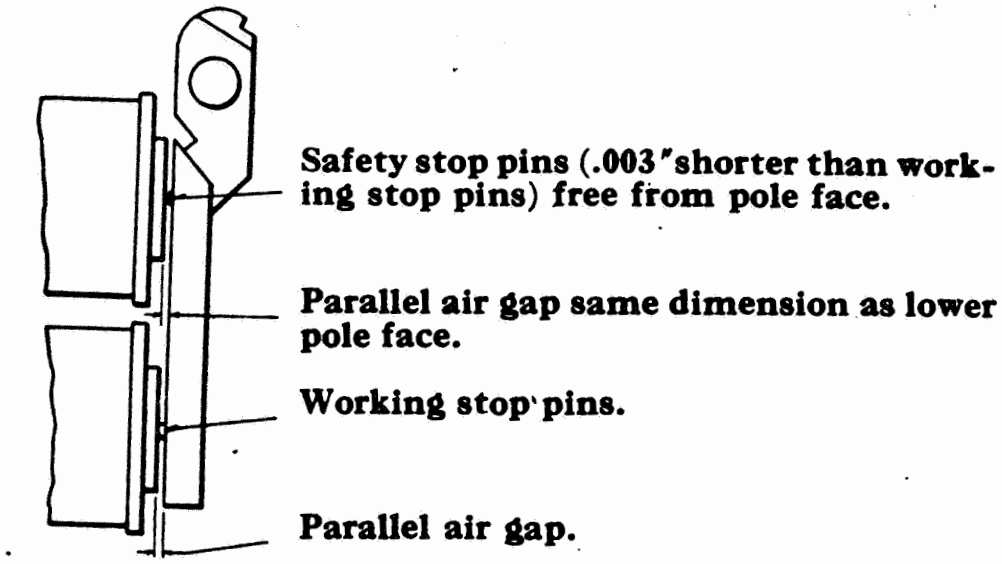

Fig. 11
CORRECT adjustment of air gap—Side View. Both magnets exactly in line.

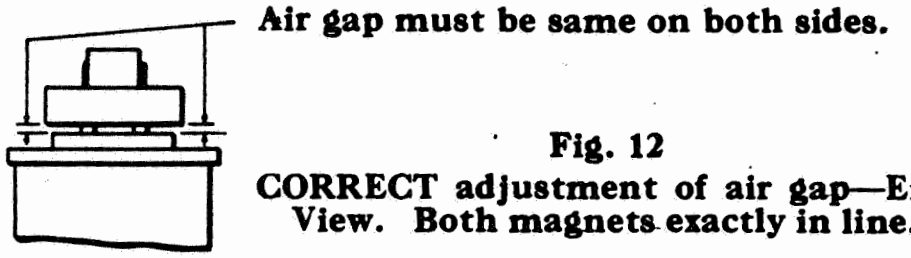

Fig. 12
CORRECT adjustment of air gap—End View. Both magnets exactly in line.

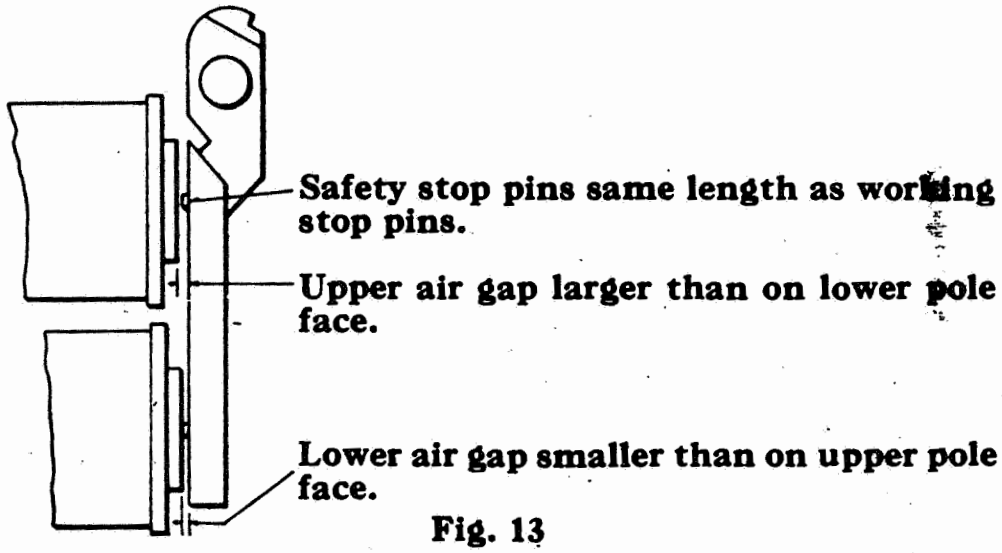

Fig. 13
INCORRECT air gap adjustment. Air gap distorted due to setting of magnets to make upper stop pins free when all four stop pins are the same length.

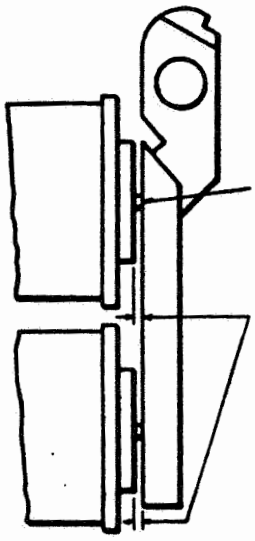

Fig. 14

INCORRECT air gap adjustment. All four stop pins same length and riding on pole faces.

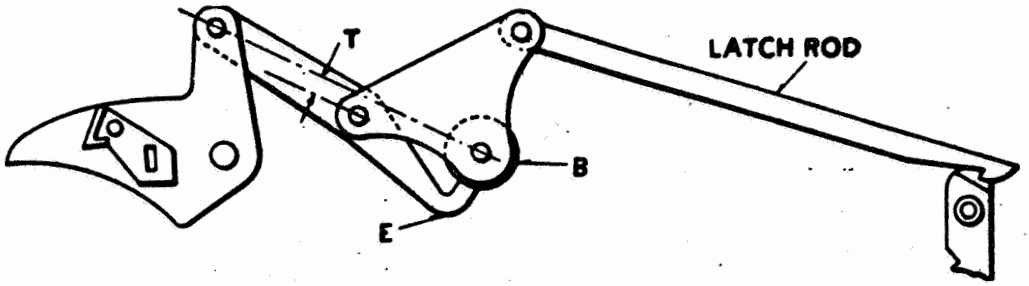

Fig. 15

Toggle is distance "T" measured when E is tight against brass stop B.

When signal is in clear position E should drop slightly away from B, but when E is pushed up tight against B, the latch rod should not move outwards more than $\frac{1}{64}$".

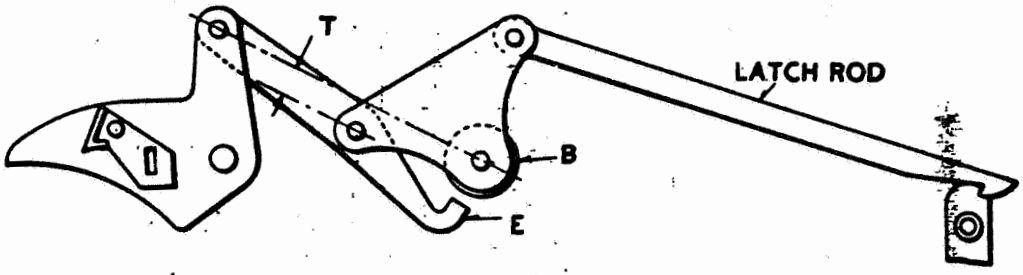

Fig. 16

Incorrect adjustment when signal is clear. Toggle is increased by drooping as shown and when pushed up against brass stop, the latch rod will move outwards more than $\frac{1}{64}$". Condition is due to wear of parts or to long latch rod and causes high release and kicking off.

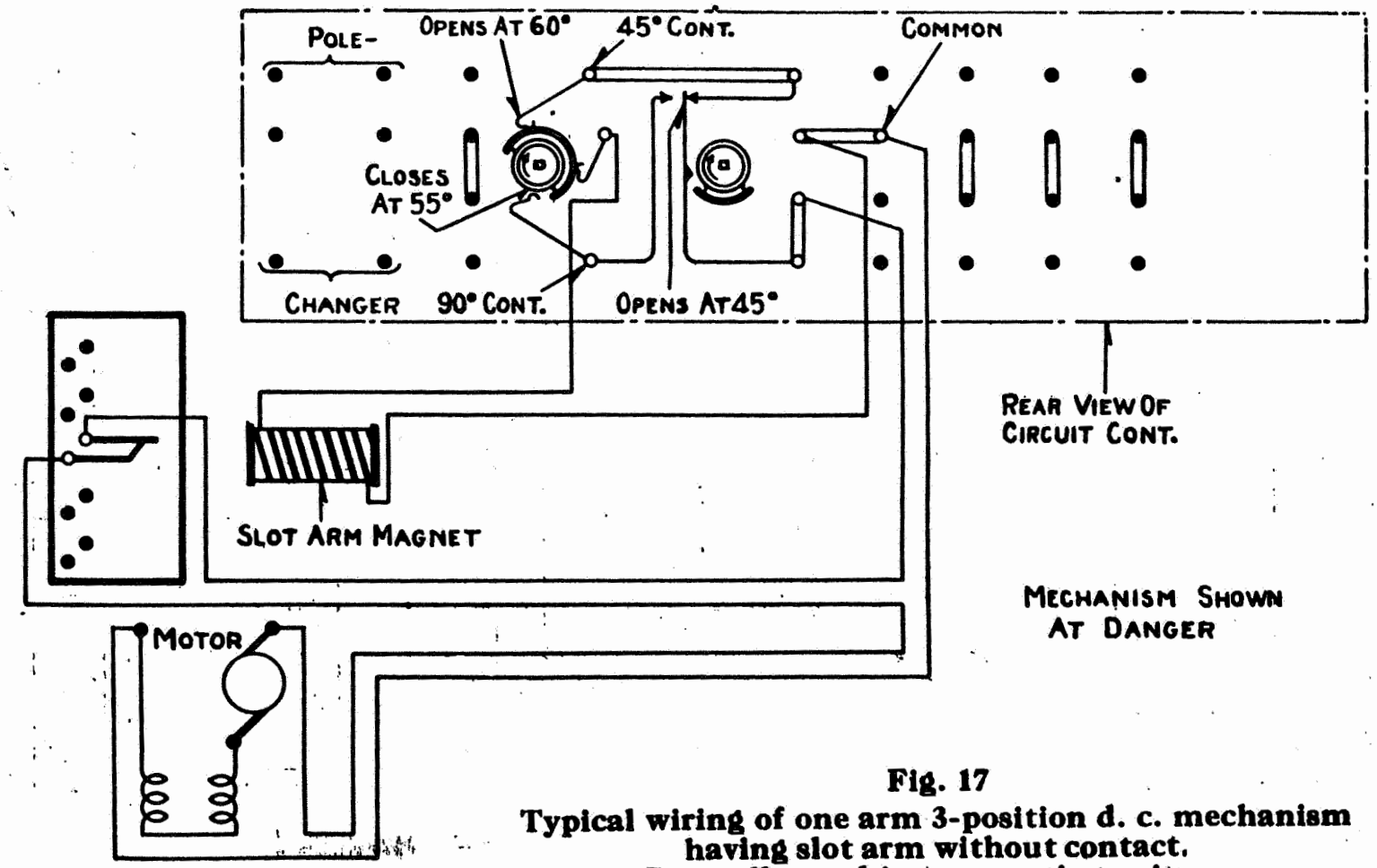

Fig. 17
Typical wiring of one arm 3-position d. c. mechanism having slot arm without contact. Generally used in automatic territory.

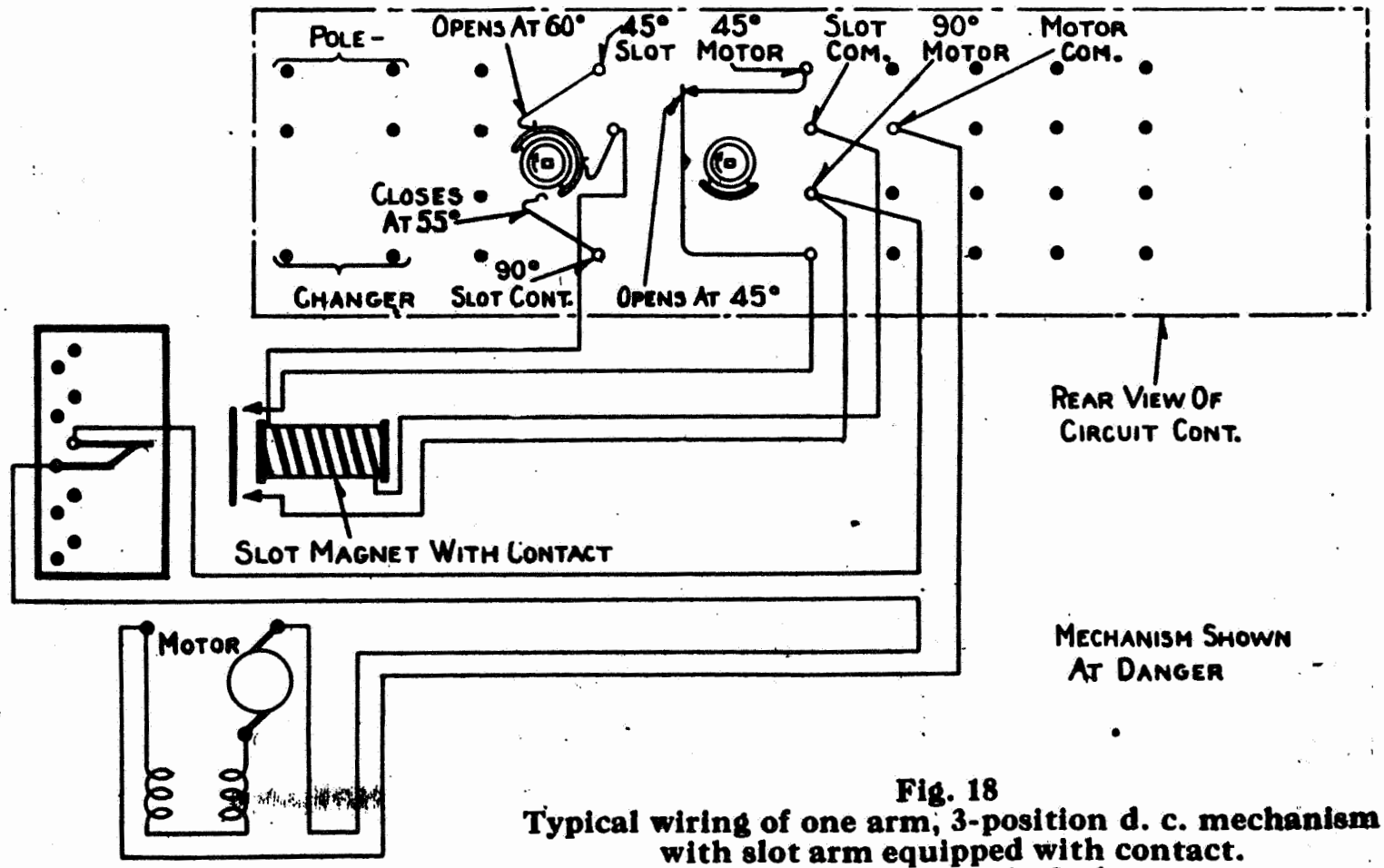

Fig. 18
Typical wiring of one arm, 3-position d. c. mechanism with slot arm equipped with contact. Generally used in interlocked territory.

SECTION II—A. C. SIGNALS

1. General:

The same general precautions should be observed for A. C. signals as for D. C. signals. These points are outlined in Section I.

Any points not mentioned in the following description of the style "S" A. C. signal are covered by Section I.

2. Driving Mechanism:

The mechanism of the A. C. signal is essentially the same as for the D. C. signal. The general appearance is shown in Figs. 19 and 20.

3. Motor:

The A. C. Style "S" signals are driven either by induction motor of the squirrel cage rotor type or by an A. C. series motor. The brake coil of the single phase induction motor is connected in series with one of the motor windings and acts as an impedance to provide phase splitting. For the 2 phase motors two brake coils are connected in multiple, one with each motor winding.

The induction type motor does not require any special care except periodic oiling. The commutator of the A. C. series motor should receive the same attention as that of the D. C. motor as outlined in Section I.

4. Armature Trunnions:

The armature bracket should move freely on its trunnion and should have an end play, when the parts are new, of not less than 0.057 inch or more than 0.080 inch.

The diameters of the armature fulcrum pin, of the hole in the armature bracket bushing, and of the holes in the supporting trunnions in the arm are such as to

provide a very close fit between these parts. Excessive wear of these parts will distort the magnetic air gap and may allow the core pins to strike the copper shad-

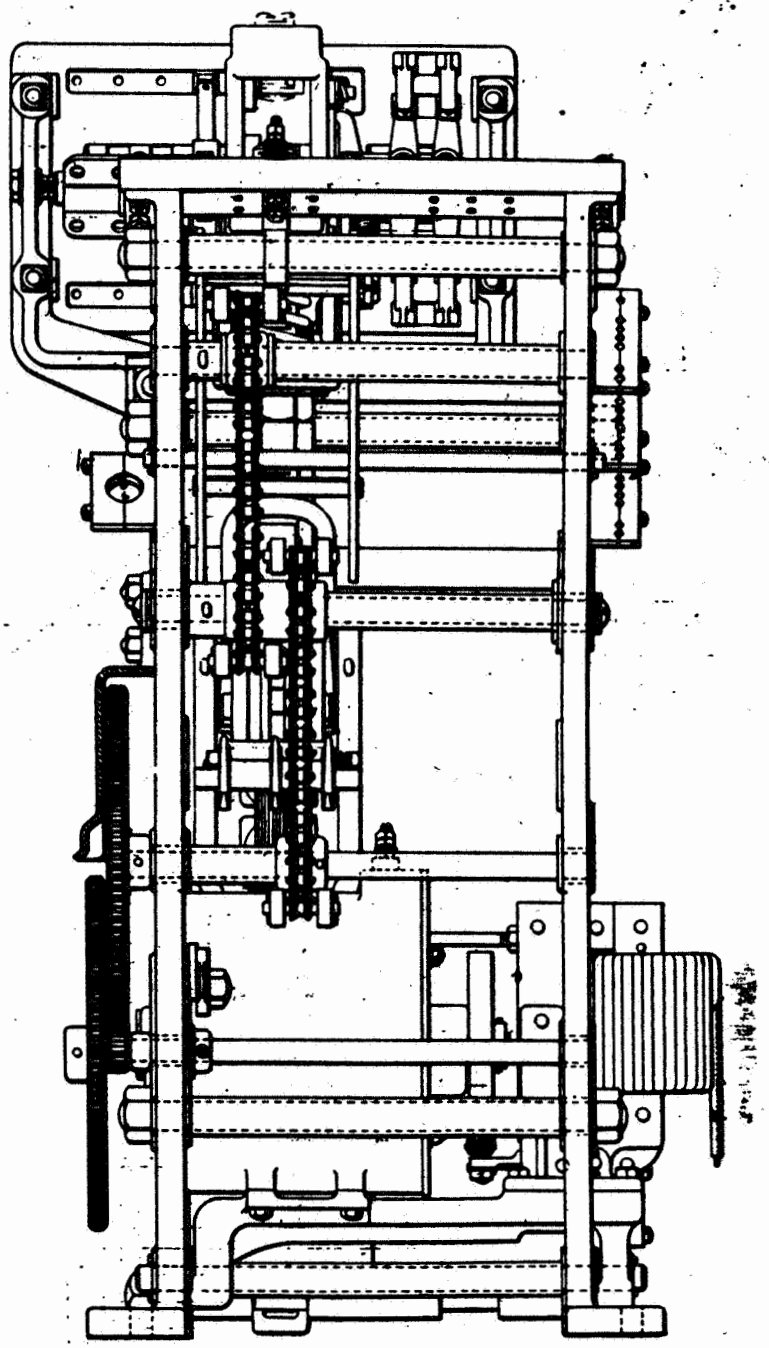

Fig. 19

End View of one arm 3 position a. c. mechanism

ing bands. This will make the air gap too large and will cause the tractive power of the slot magnet to be lowered below that necessary for proper operation of the signal.

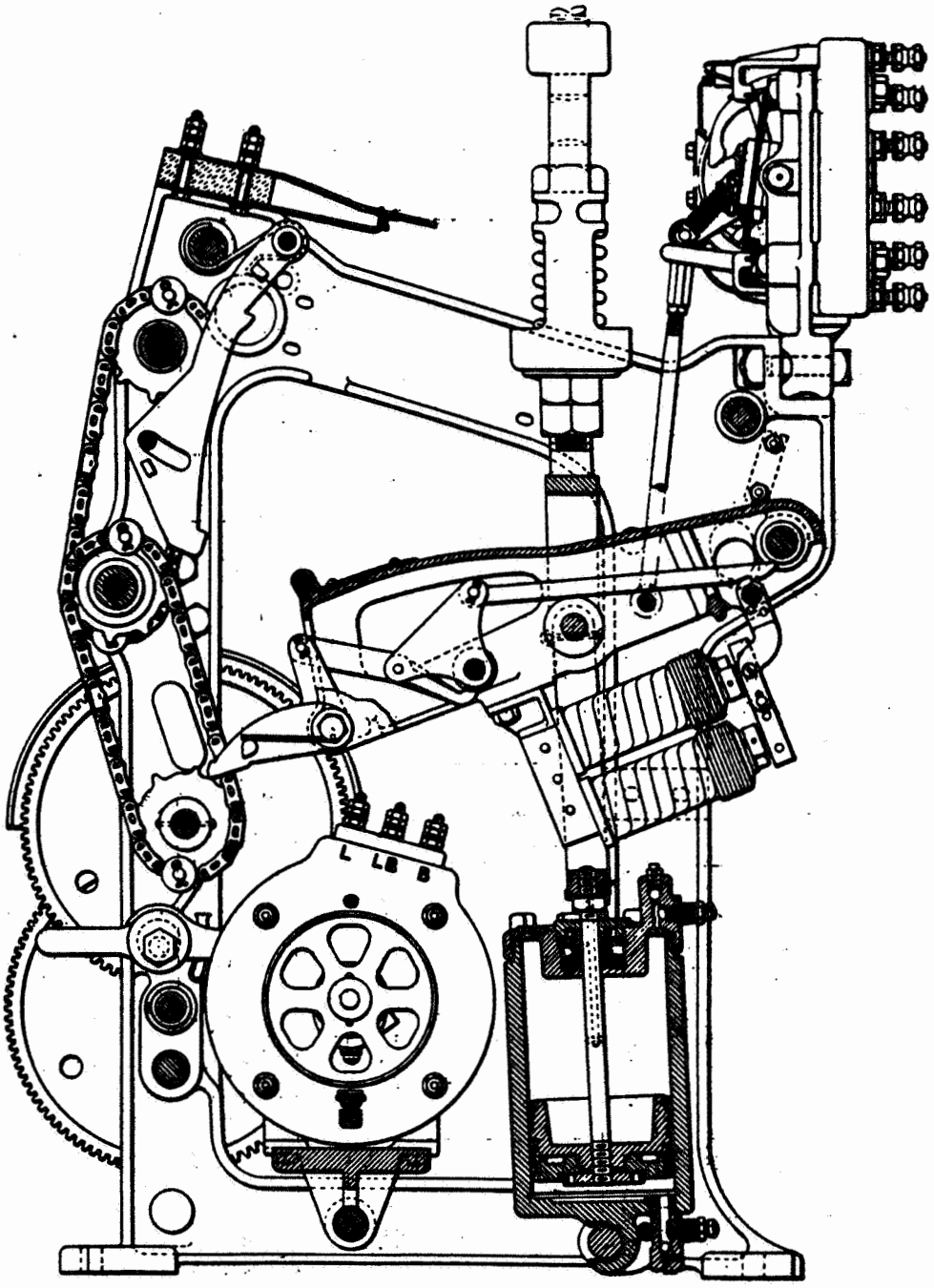

Fig. 20

Side View of one arm 3 position a. c. mechanism

With the end play taken up in one direction against one of the trunnions, the swing of the lower end of the armature bracket in the same direction should not be more than $\frac{3}{64}$ inch when the trunnions, trunnion pin, and armature bracket bushing are new.

The end play of the armature between the sides of the armature bracket should not exceed $\frac{1}{16}$ inch.

The total side play of the lower end of the armature should not exceed $\frac{1}{4}$ inch. The limiting factor is how the core pins strike the pole pieces. The core pins must not interfere with the ferrules or come close to an edge of the pole faces.

5. Slot Magnets:

The slot magnet differs in a number of important details from that of the D. C. signal. The magnetic circuit consists of U shaped laminations of transformer steel which are riveted together and to a bracket at the closed end of the U. The coils are slipped over the legs of the magnet and are held in place by pins passing through the outer ends of the legs close to the head of the coil.

To provide for a continuous flow of flux from the core to the armature, heavy copper shading bands are placed in the pole faces so as to surround approximately one-half of the area. These bands or ferrules cause the flux passing through them to lag the main flux in the unshaded part. The result is, then, that when the flux in the unshaded part of the pole face is zero at the time when it reverses, there is still a certain amount of flux flowing in the shaded part of the pole face. Chattering of the armature is thereby prevented.

The armature of the A. C. slot magnet is not rigidly connected to the bracket. A certain amount of play is provided so that the armature may be seated firmly against the pole faces under all conditions. This is necessary to insure that there is no chattering.

Chattering of the armature will, in time, hammer down the core pins and thus take away the protection against residual magnetism which the core pins give.

Core pins for A.C. slot magnets are made 0.015" long for 25 cycle or 60 cycle signals using slot contacts and 0.020" long for 50 cycle or 60 cycle signals without slot contacts. All four core pins should bear on the pole faces of the magnet when the magnet is energized. The armature should not ride on the projecting part of the shading bands nor should the core pins strike the shading bands. In either case the armature position should be re-adjusted, or, if necessary, a new armature should be installed to get the correct adjustment. The shading bands should project beyond the pole faces 0.010" when the core pins are 0.015" long and 0.015" when the core pins are 0.020" long.

Unlike the D. C. slot magnets, the A. C. magnets can not be made slow acting. It is therefore necessary when A. C. signals are used, to provide a slow acting relay, which will keep energy on the slot arm during the open circuit period which occurs when the three position track relay is being reversed.

6. Circuits:

Typical circuits for A. C. signals are shown in Figs. 22 and 23.

7. Electrical Inspection:

Periodic tests should be made of the release values of the slot magnets. The results should be tabulated so that comparison may be made to determine whether or not the condition of the signal is changing.

The release of A. C. slot magnets should not be allowed to drop below 40% of the normal rated voltage.

If the release of the signal is less than 40% of the rated normal voltage it may be due to any one or a combination of the conditions outlined in Section I page 17, "Points to be observed."

The circuit for testing release of slot magnets is shown in Fig. 21.

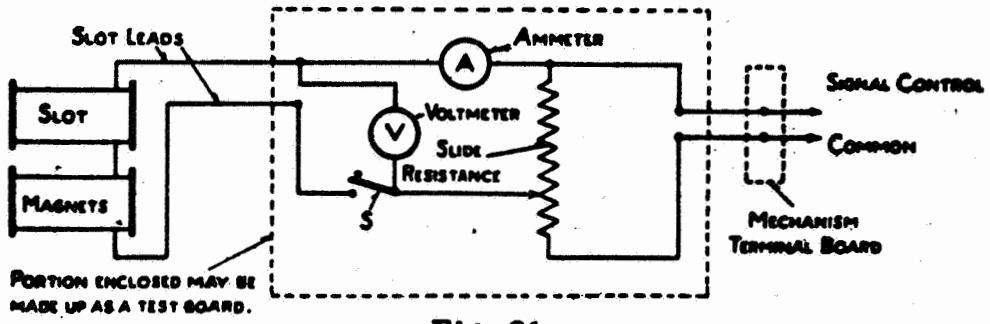

Fig. 21

The apparatus required for these tests is as follows:

1—90 ohm adjustable resistance slide, 2 Amp. Capacity (U. S. & S. Co. Dwg. 65525-B9954, Sh. 7).

1—A. C. Ammeter 0-1.0 Ampere.

1—A. C. Voltmeter 0-150 and 0-75 volt scales.

It should be noted that the armature will hold in the clear position of the signal, without humming or chattering on 80% of the normal operating voltage. Any tendency to chatter indicates improper adjustment and the cause should be located and removed.

Chattering may be caused by:—

(a) Upper core pins not resting on the poleface. This may be corrected by moving the magnet toward the armature.

(b) The two core pins on one side of the armature not touching the poleface. The magnet should be twisted sideways until all four corepins rest on the poleface.

(c) Core pins resting on copper shading bands. The magnet should be adjusted until the corepins clear the shading bands and rest on the polefaces.

(d) Improper toggle adjustment in the slot arm. Proceed as described in Section I for adjusting the toggle under "Points to be observed" 5a, 5b, 5c, 5d and 5e.

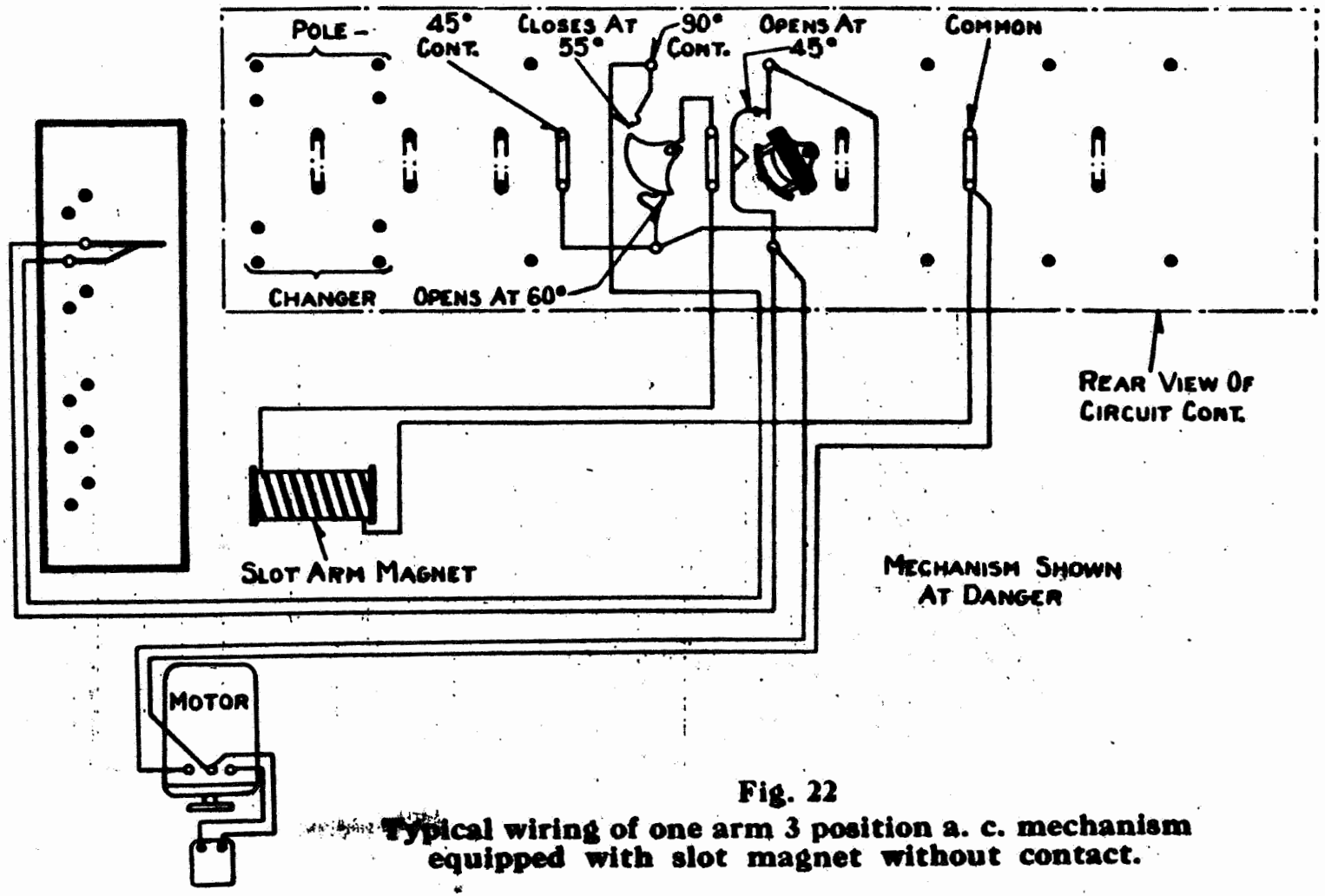

Fig. 22
Typical wiring of one arm 3 position a. c. mechanism equipped with slot magnet without contact.

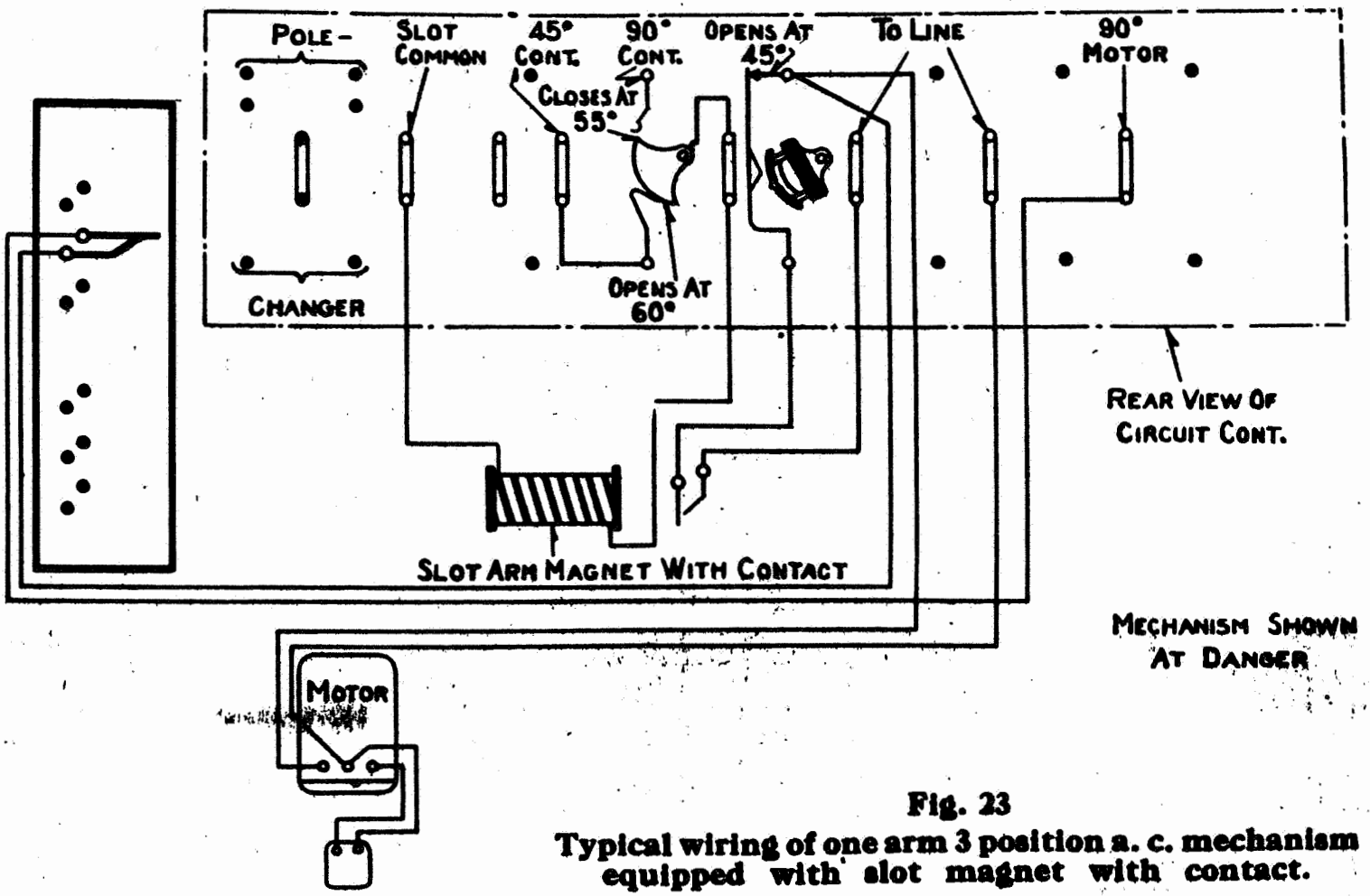

Fig. 23
Typical wiring of one arm 3 position a. c. mechanism equipped with slot magnet with contact.